XMODS™ Body Kit for 1967 Chevy Camaro

The XMODS™ Custom RC Body kit provides the opportunity to customize the body of your can with skirts, bumpers, hood and tires. You can also change the controller's steering wheel.

60-8529

1

Assemble the upgrade body parts in the order listed below.

1. Replace the front bumper.
2. Replace the hood.
3. Replace the left and right side body skirts.
4. Drill a 2mm hole in the body in the center of each mark. You can use the hand drill included in the XMODS Tool Kit.
5. Screw the spoiler to the body from below the body.
6. Replace the rear bumper.
7. Attach the body lifting adapter if you are going to use the Hot Rod tires. Since the tires' diameter is larger than the original tires, you have to use this adapter so the body won't touch the tires.
8. Use the lug wrench in your XMODS starter kit to detach the lug nuts from the car's rear wheels. Then, remove a wheel and tire. The bearings might come off - take care not to lose them.
9. Remove the rear tire from the wheel and replace it with a new rear tire.

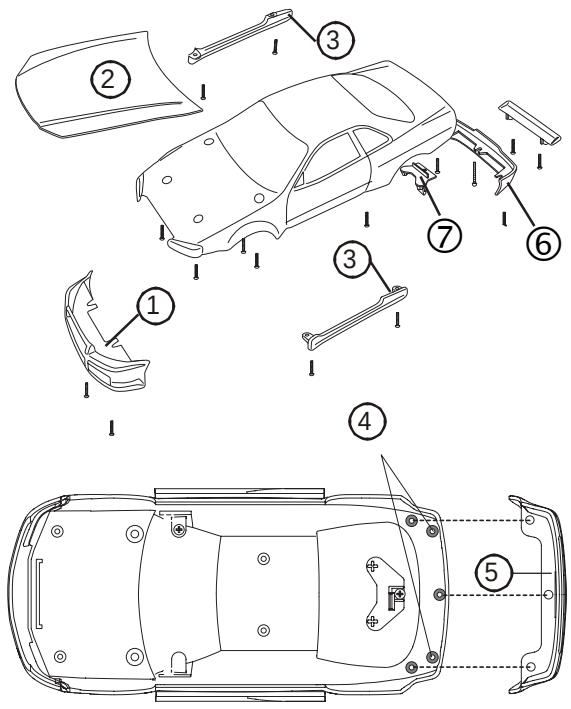

2

Install the controller's new steering wheel.

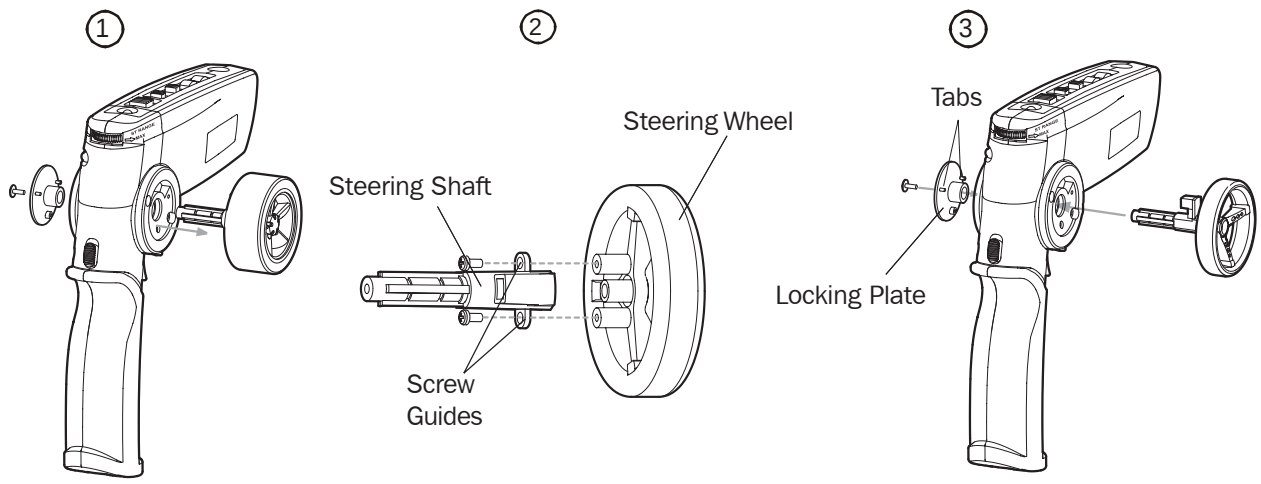

1) Remove the screw from your controller's locking plate.
2) Affix the steering shaft to the upgrade steering wheel with two screws.
3) Align and insert the steering shaft into the controller.
   Align tabs on the locking plate and affix with the original screw.

©2004 RadioShack Corporation
All Rights Reserved.
RadioShack and RadioShack.com are trademarks used by RadioShack Corporation.

www.xmodsRC.com

INS-3273-US-00
Printed in China
07A04